Have a look at our complete product range relating to Assembly Projects – Maintenance ...and much more.

Ask for the Mechatronics catalogue.

GUNT-CATALOGUE No. 2, "MECHATRONICS", COVERS THE FOLLOWING PROGRAM GROUPS

Basic principles

- Engineering Drawing
- Cutaway Models
- Dimensional Metrology
- Fasteners and Machine Parts
- Manufacturing Engineering

More detailed learning content

- Assembly Projects
- Maintenance
- Machinery Diagnosis
- Automation

PLANNING & CONSULTING · TECHNICAL SERVICE · COMMISSIONING & TRAINING

DIN EN ISO 9001 SGS

G.U.N.T. Gerätebau GmbH
Fahrenberg 14
D-22885 Barsbüttel · GERMANY

phone: +49 40 67 08 54 - 0
fax: +49 40 67 08 54 - 42

web: www.gunt.de
e-mail: sales@gunt.de

Use the CD catalogue!

Visit our website www.gunt.de

EQUIPMENT FOR ENGINEERING EDUCATION

gunt HAMBURG

ASSEMBLY PROJECTS – MAINTENANCE

You educate apprentice tradesmen in technical schools and factories...

...we offer you practice-oriented teaching and training systems for your education relating to

Assembly · *Maintenance* · *Repair*

INDUSTRIAL TRAINING AND VOCATIONAL QUALIFICATION

Maintenance is a Key Area in Apprentice Training

Plant and machinery should be operational…

Therefore maintenance is an essential part of production and machine management.

…not sitting idle

You must have:

- Strategies and methods in place
- Qualified and trained staff

GUNT supports you with our proven teaching systems regarding Assembly Projects and Maintenance. Our service will help you to make the education of your staff much more practice-oriented.

This is hands-on tuition in practice.

A Selection of Assembly Exercises

MT 152

MT 154

GL 430

…there is much more at GUNT. On the following pages we show you some detailed examples.

MT 156

MT 157

MT 158

MT 140.02

MT 140.01

MT 110.02

MT 180

MT 181

MT 182

MT 183

MT 184

MT 185

Learning Concepts Relating to Industrial Maintenance

The maintenance

of industrial plant and machinery is a key field of activity for technicians and skilled tradesmen working in mechanical and electrical engineering.

Key area in technical training

The level of attention devoted to the subject of maintenance by the curricula is therefore high.

TEACHING AND LEARNING SYSTEMS RELATING TO MAINTENANCE

GUNT-Gerätebau GmbH offers you a wide range of wholly practice-oriented teaching and training systems relating to technical maintenance with which you can cover essential learning content:

Use of specific manufacturer's documentation for maintenance, inspection and repair	Planning and assessing maintenance sequences and steps
Reading and understanding engineering drawings	Practical execution and documentation of maintenance operations
Familiarisation with machine and system components	Testing and commissioning of repaired systems
Understanding maintenance as the interaction between inspection, maintenance and repair	Assessment of malfunctions, detection of faults

The GUNT training systems are ideally suitable for students' group working, and of course for project-oriented working methods.

Things don't have to get this bad

It's possible to do something in time

What is maintenance?

'Maintenance' as defined by German industry standard DIN 31051 is a complex field, so the range of teaching and training systems we offer in this area is very diverse.

MAINTENANCE TO DIN 31051

Maintenance	Inspection	Repair
Maintaining the required condition	Recording and assessing the actual condition	Restoring the required condition
Cleaning, lubricating, adjusting	Measuring, testing, diagnosing	Replacing, correcting
With the plant shut down only, and in accordance with the maintenance instructions	With the plant running and shut down, in accordance with inspection instructions	With the plant shut down only, based on work order and after thorough preparation

This theme should be read in close conjunction with the GUNT catalogue no. 2

LEARNING THROUGH PRACTICE...

ASSEMBLY PROJECTS

This chapter deals with the process of familiarisation with component and their functions, reading and understanding engineering drawings or operating instructions, and familiarisation with technical terminology and language. The assembly exercises can be conducted in relatively short periods of time (within lesson units) and do not as yet require any particular technical experience. Fault diagnosis and maintenance measures are not yet central to the training systems.

MAINTENANCE

The real, industrial nature of the exercises is higher than in the Assembly Projects. Typical maintenance methods and testing procedures are offered as learning content. Some of the exercises take a lot of time to complete and amount to substantial project work. Demands are made on technical skills.

MACHINERY DIAGNOSIS

The teaching systems familiarise trainees with the specific methods of monitoring plant/machinery condition, such as the early detection of bearing or gear damage. We work primarily with vibration analysis methods which constitute diagnostic steps for preventive maintenance or targeted repair.

...SO THE THEORY IS EASY!

TZ 200.71 Lever Shears Assembly Kit

Coverage of the fundamentals: An Assembly Kit for introducing a course

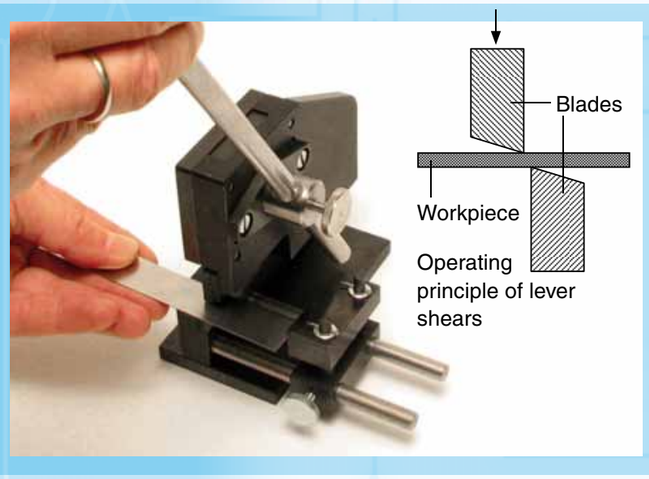

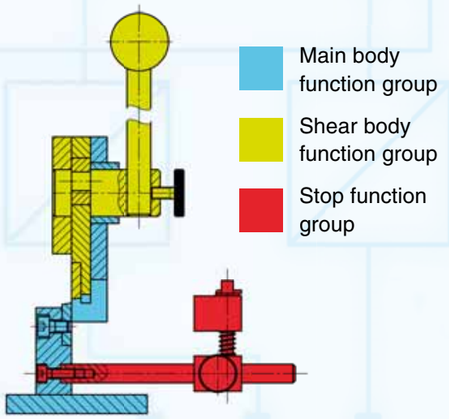

Lever shears function groups

Function group	Partial function	Movement
Main body	Carries, supports and guides all other parts	None
Stop	Sets the length to be cut off	None
Shear body	Transmits the shearing force to the workpiece	Rotary & linear motion

- Interdisciplinary teaching possibilities.
- Learning in a small team is an effective learning format.
- Excellent instructional materials, including a CD, for printing and presentation.

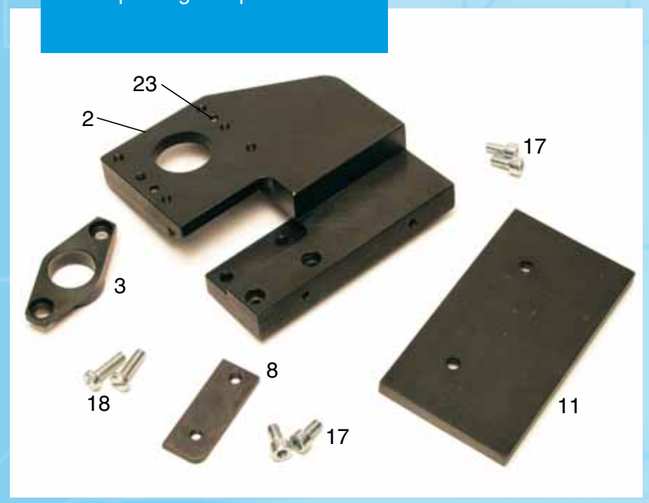

Assembly step 1 (Main body) – Parts required for assembly

Pos.	Name	Pos.	Name
2	Main body	17	Cheese head screw
3	Bearing flange	18	Cheese head screw
8	Lower blade	23	Paralell pin
11	Base plate		

Learning Objectives / Experiments

- Introduction to technical drawing:
  - reading and understanding technical drawings
  - three-plane views
  - sectional views
  - drawing types
  - 3D views
  - parts lists
  - dimensioning
  - surface finish and tolerance specifications
  - differentiation between standard and production parts
  - material specifications
- Planning and execution of simple assembly operations:
  - planning and describing work sequences
  - assessing results
- Measurement exercises:
  - length measurements
  - angle measurements
- Manufacturing methods:
  - operational examples of handmade production and production on machine tools

MT 158 Assembly Exercise: Ball Valve and Shut-off Valve

The assembly kit

Two different valves and fittings in one assembly kit.

Parts are clearly and perfectly arranged.

- Exercises can be conducted in a classroom – no workshop environment necessary.
- Assembly exercises can be conducted in relatively short periods of time (within lesson units).
- Comprehensive and well-structured instructional material will impress you.

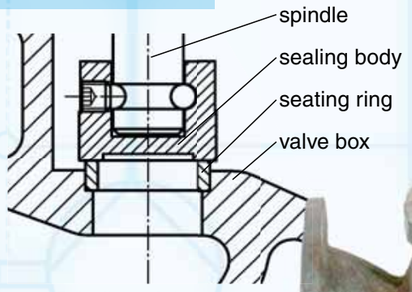

Grinding of the seat of a flatseat valve

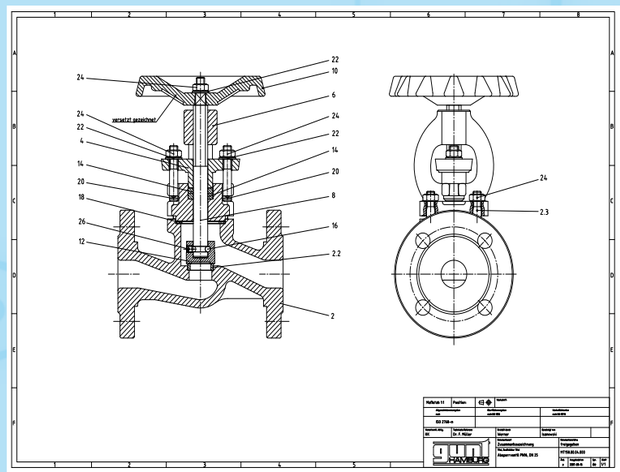

Replacement parts available according to part lists and drawings

Learning Objectives / Experiments

- Design and function of a ball valve
- Design and function of a valve
- Assembly and disassembly, including for the purposes of maintenance and repair
- Replacing components (e.g. seal)
- Comparison of 2 different valves and fittings
- Reading and understanding engineering drawings and operating instructions
- Leak testing (together with hydraulic valves and fittings test stand MT 162)

MT 186 Assembly & Maintenance Exercise: Gear Pump

Installing the driven shaft

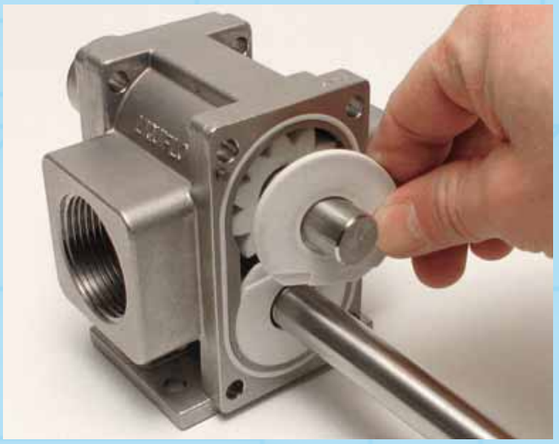

Mounting the wearing discs

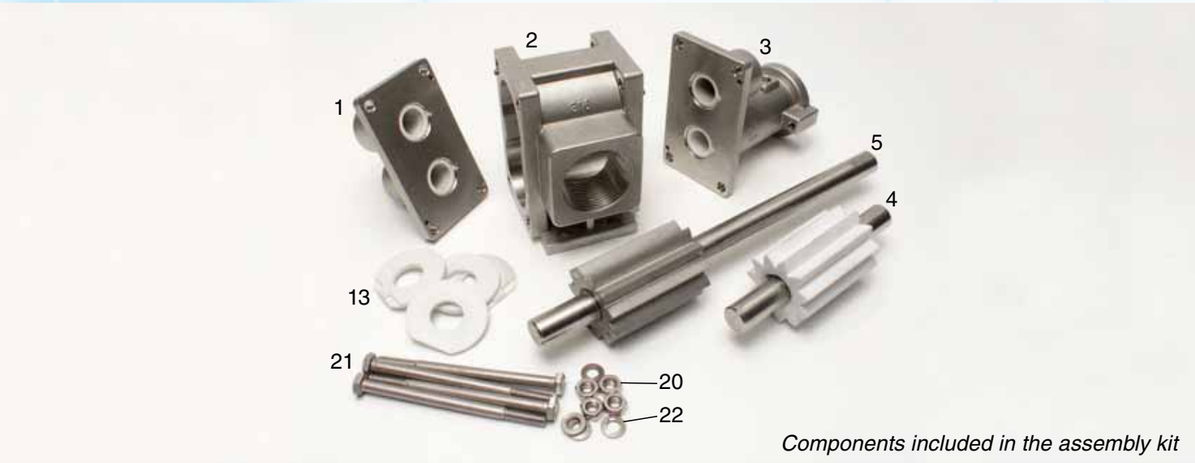

Components included in the assembly kit

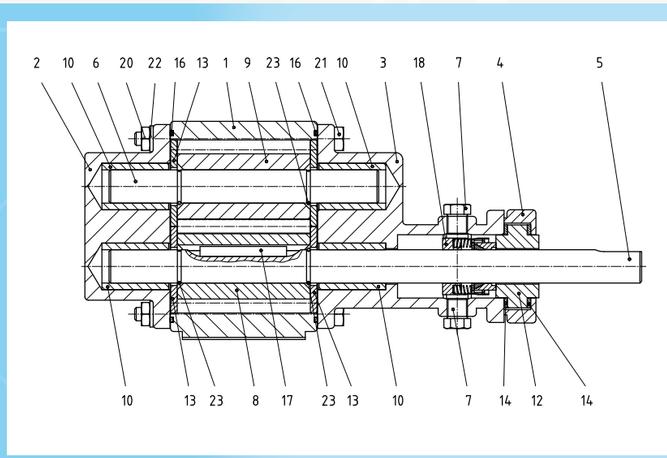

Learning Objectives / Experiments

- Design and function of a gear pump and its components
- Assembly and disassembly for maintenance and repair purposes
- Replacing components (e.g. seals)
- Troubleshooting, fault assessment
- Planning and assessment of maintenance and repair operations
- Reading and understanding engineering drawings and operating instructions

MT 140.02 Assembly Exercise: Piston Compressor

Students studying the assembly

Crankcase, crankshaft, oil distribution ring

An assembled compressor, to the right individual parts, exploded view in the background

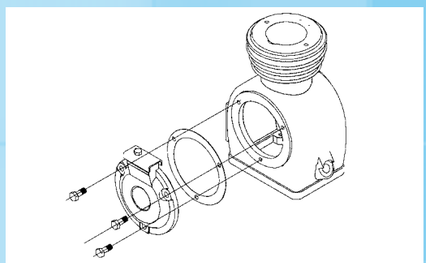

Learning Objectives / Experiments

- Design and function of a compressor
- Reading and understanding engineering drawings
- Familiarisation with components and assemblies, their design features and functions
- Dimensioning exercises, gauging of parts
- Work planning, particularly planning and presentation of the assembly process
- Familiarisation with assembly aids and jigs
- Assembly exercises: component and complete unit assembly
- Analysis of faults and damage, in conjunction with maintenance and repair steps
- Material selection criteria

In conjunction with MT 140.01:

- Functional testing of the assembled compressor

MT 110.02 Assembly Exercise: Spur Wheel/Worm Gear Mechanism

A totaly hands-on Assembly Exercise

An example of assembly section

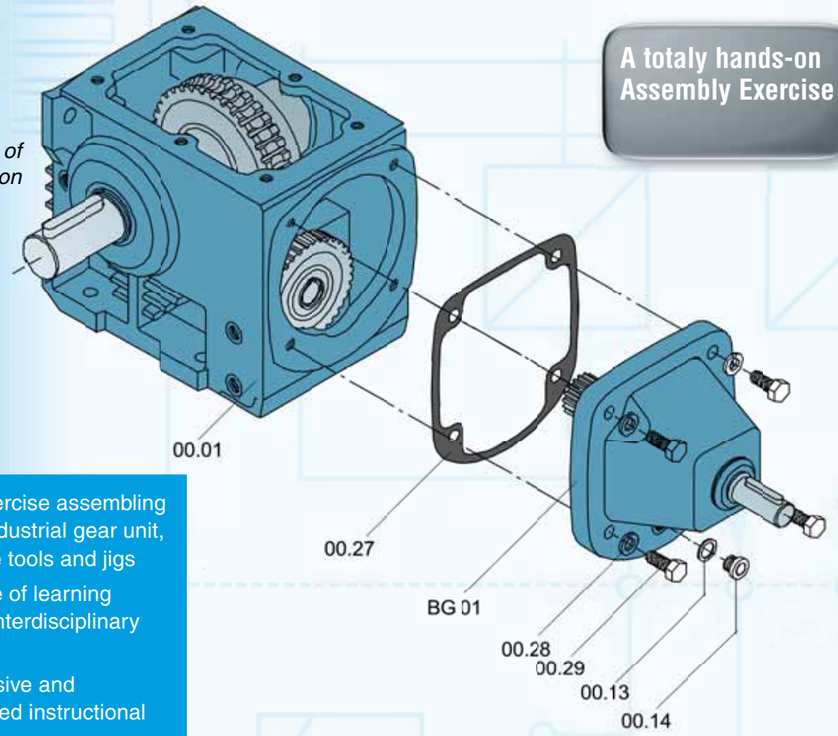

- Practical exercise assembling a modern industrial gear unit, using simple tools and jigs
- Broad scope of learning presenting interdisciplinary problems
- Comprehensive and well-structured instructional material

Left hand: single parts of the gear
Right hand: fully assembled multistage gear

Learning Objectives/Experiments

- Design and function of a multistage gear combination
- Reading and understanding engineering drawings
- Familiarisation with component and assemblies, their design features and functions
- Dimensioning exercises, gauging of parts
- Work planning, particularly planning and presentation of the assembly process
- Familiarisation with assembly aids and jigs
- Assembly exercises: component and complete unit assembly
- Analysis of faults and damage, in conjunction with maintenance and repair steps
- Material selection criteria

In conjunction with MT 172:

- Functional testing of the assembled gear unit

MT 190 Assembly Project: Materials Tester

Build your own materials tester

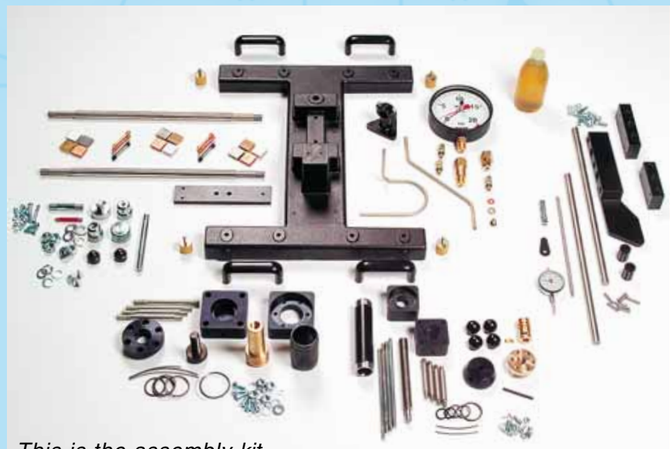

This is the assembly kit...

...and this is the result

Learning Objectives/Experiments

- Reading and understanding technical documentation
- Planning and execution of assembly operations and sequences
- Familiarisation with machine elements and components
- Commissioning and checking of a materials tester following assembly
- Planning, execution and assessment of maintenance operations
- Fault analysis: Troubleshooting, fault assessment and repair

After assembly:

- Tensile test of metallic specimens
- Recording of stress-elongation diagrams
- Brinell hardness test

MT 210 Assembly & Maintenance Exercise: Refrigeration

Fully assembled MT 210 unit

1 Fully hermetic compressor
2 Filter dryer
3 Sight glass with humidity indicator
4 Delivery side manometer
5 HP (high-pressure) pressure switch
6 LP (low-pressure) pressure switch
7 Intake side manometer
8 Cooling chamber with evaporator and fan 2
9 Thermostat
10 Expansion valve
11 Assembly panel
12 Solenoid valve
13 Condenser with fan 1
14 Service valves
15 Electrical switch box

Leak testing at expansion valve

Maintenance, repair, troubleshooting of a refrigeration system ...totally practice-oriented

Learning Objectives / Experiments

- Reading and understanding technical documentation
- Planning and execution of assembly operations and sequences
- Making piping connections as per system diagram
- Electrical installation as per circuit diagram
- Commissioning and checking of a refrigeration unit following assembly (in conjunction with ET 150.01)
- Familiarisation with the function of the components of a refrigeration system and of the complete system
- Fault analysis: troubleshooting, fault assessment and repair
- Planning, execution and assessment of maintenance operations

In conjunction with ET 150.01:

- Evacuation and filling of refrigeration units

HL 960 Assembly Station: Pipes and Valves and Fittings

Service technician at work

Practically oriented assembly of piping and system installations

Maintenance Repair

...it is difficult to imagine a more hands-on training system

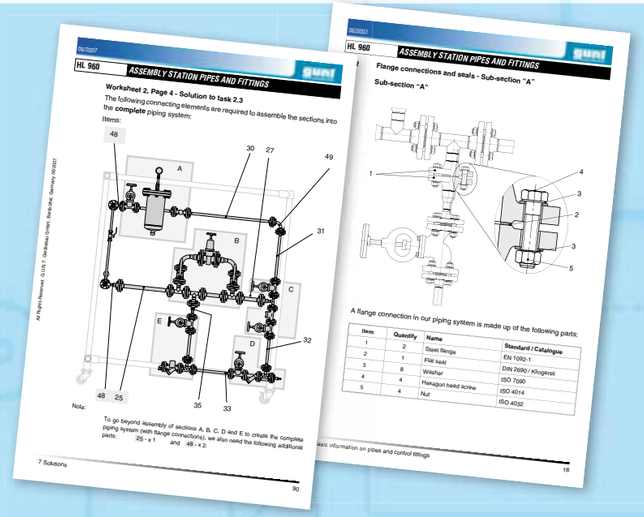

Two examples from our comprehensive training documentation

Learning Objectives / Experiments

- Design and function of valves and fittings, piping elements and system components
- Planning of piping and system installations according to specification, e.g. a process schematic
- Selection of components and drafting of requirement lists
- Technically correct preparation and execution of system assembly
- Reading and understanding engineering drawings and technical documentation
- Operational testing of the constructed systems (in conjunction with suitable water supply and disposal)

The Instructional Material will Impress You

Tasks and solutions

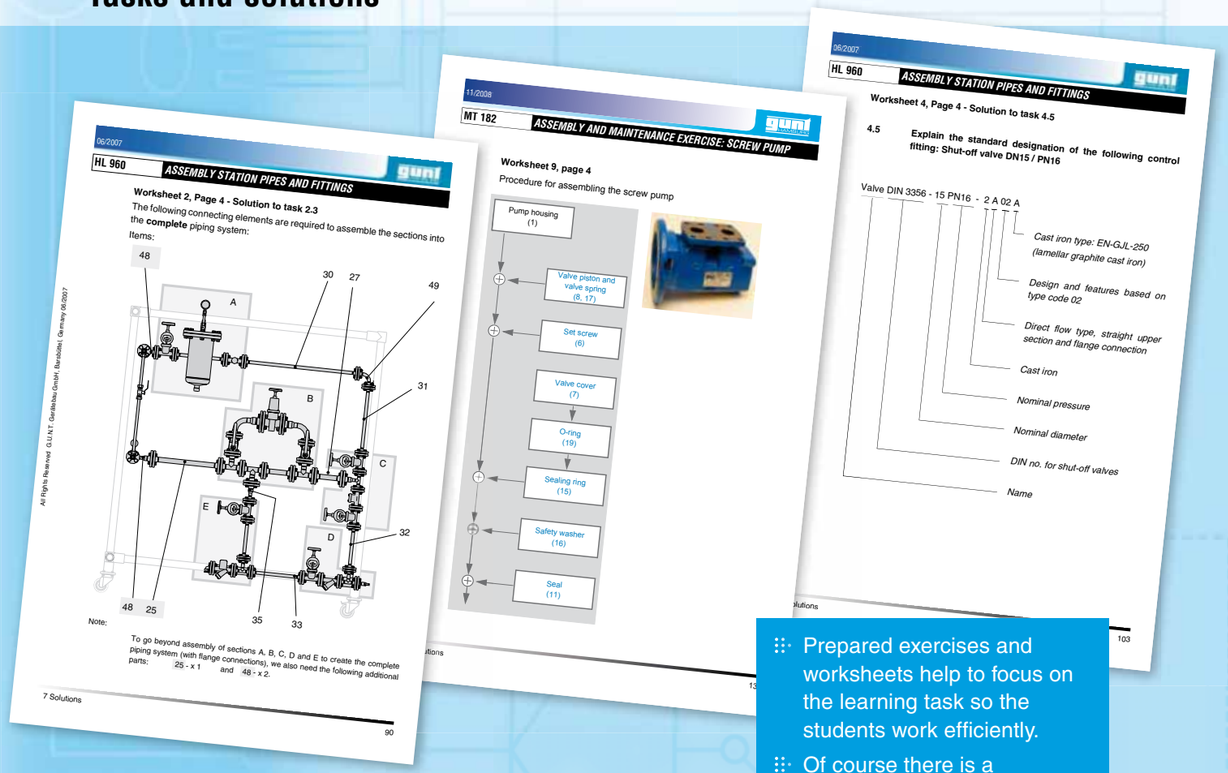

- Prepared exercises and worksheets help to focus on the learning task so the students work efficiently.
- Of course there is a recommended solution for every exercise.

Complete set of drawings

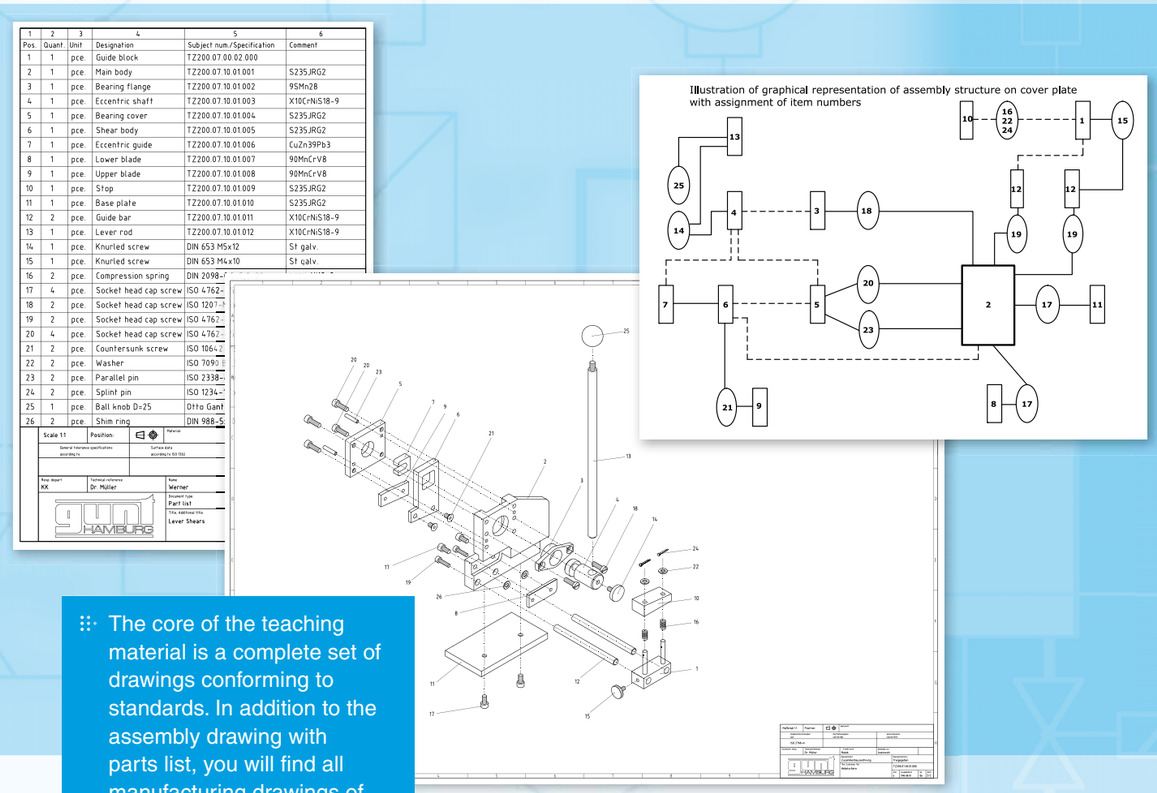

- The core of the teaching material is a complete set of drawings conforming to standards. In addition to the assembly drawing with parts list, you will find all manufacturing drawings of the individual parts.
  So you are able to produce your own parts, or have them manufactured for you.

The complete material on CD (PDF)

The complete instructional material is delivered in hardcopy form in a clearly arranged folder.

Additionally you receive the complete material as PDF-files. It includes all texts, graphics and drawings. That way you can conveniently print or present.

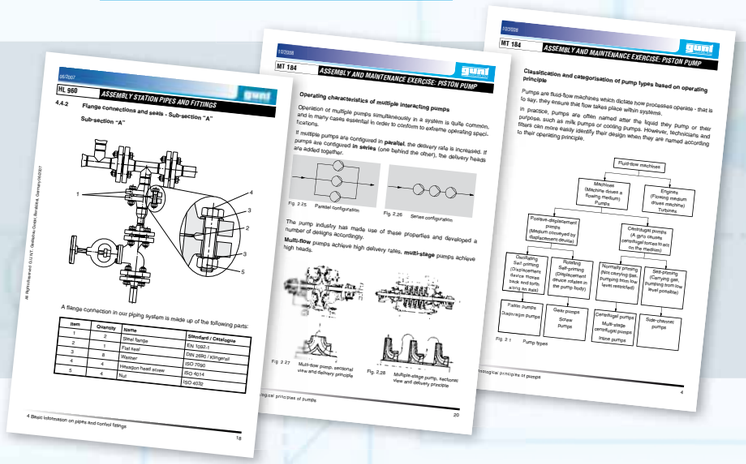

Fundamental principles presented in detail

The basic principles and technical descriptions are professionally illustrated with lots of graphics, photos and clear text.

The pages are suitable for printing out or using with a video projector.