WL 110.02 *Plate Heat Exchanger*

* Plate heat exchanger for connection to WL 110 service unit

Technical Description

The key feature of plate heat exchangers is their compact design, in which optimum use is made of all of the material for heat transfer. The pressed in profile on the plates creates narrow flow channels, in which significant turbulence occurs. The turbulent flow allows effective heat transfer even with low flow rates and also has a self-cleaning effect. Plate heat exchangers are used in the food industry, offshore technology, refrigeration and domestic engineering.

The WL 110.02 is part of a series of units enabling experiments to be performed on different heat exchanger types. In conjunction with the WL 110 service unit, which has a hot and cold water circuit and all of the necessary connections, the experimental unit is ideally suited for investigating the functioning and behaviour of a plate heat exchanger in operation.

The WL 110.02 is connected to the WL 110 using quick-release couplings. The plate heat exchanger is made up of profiled plates with water flowing through the spaces between them. The plates are soldered in such a way that two separate flow channels are formed. These are one “cold” and one “hot” flow channel, in an alternating arrangement. Hot and cold water flow continuously. Part of the thermal energy of the hot water is transferred to the cold water. Valves are used to adjust the flow of hot and cold water. The supply hose can be reconnected using quick-release couplings, allowing the flow direction to be reversed. This allows parallel flow and counterflow operation. The temperature sensors for measuring the inlet and outlet temperature are located at the supply connections on the WL 110.

During experiments, temperature curves are plotted and displayed graphically. Additionally, the measured values can be recorded and processed using data acquisition software. The mean heat transfer coefficient is then calculated as a characteristic variable.

The well-structured instructional material sets out the fundamentals and provides a step-by-step guide through the experiments.

Learning Objectives / Experiments

In conjunction with WL 110 service unit
- Function and behaviour during operation of a plate heat exchanger
- Plotting temperature curves
  * in parallel flow operation
  * in counterflow operation
- Calculation of mean heat transfer coefficient
- Comparison with other heat exchanger types

ENERGY & ENVIRONMENT

WL 110.02 *Plate Heat Exchanger*

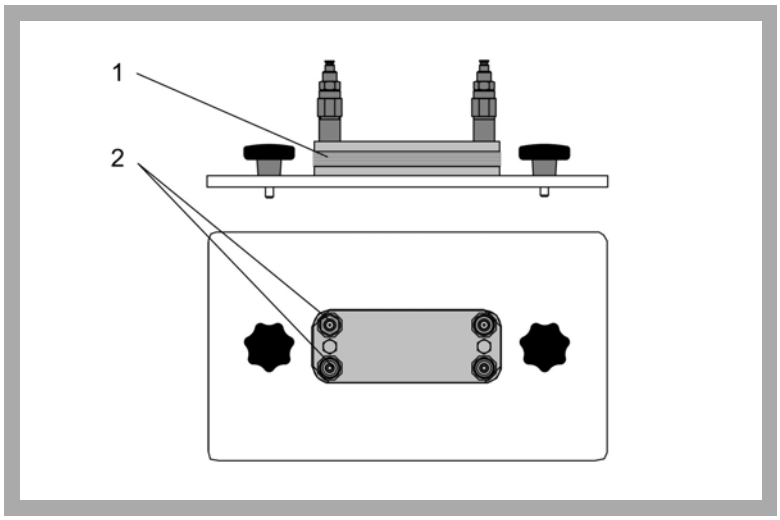

1 plates, 2 water connections

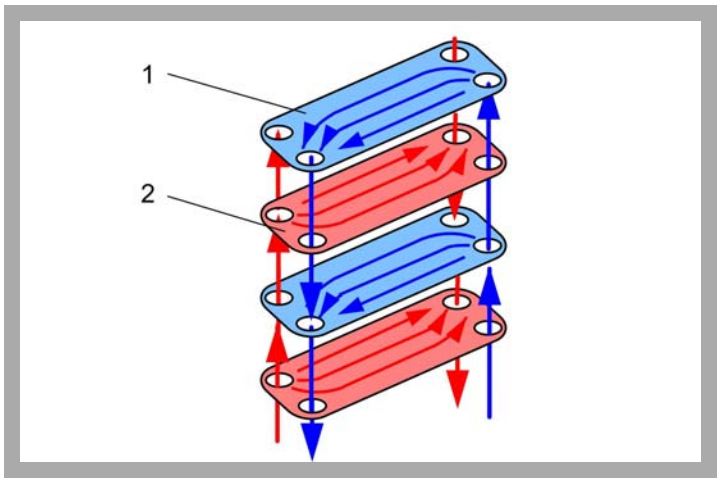

1 plate with cold water, 2 plate with hot water;
red: hot water, blue: cold water

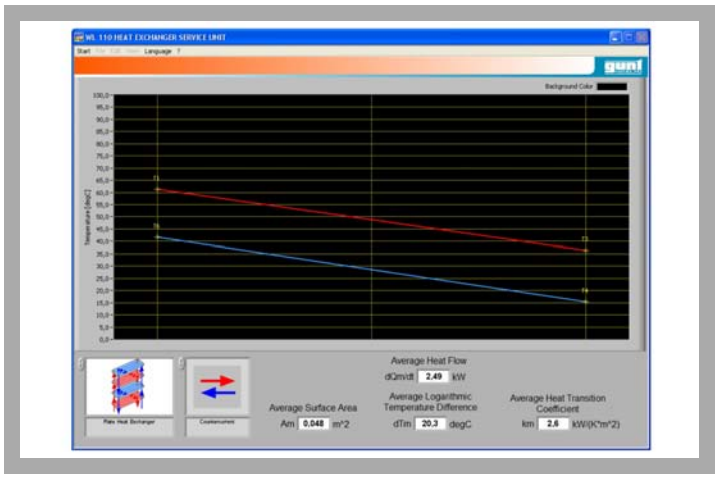

Software screenshot: temperature curve in counterflow operation

Specification

[1] Plate heat exchanger for connection to WL 110
[2] Hot and cold water supply from WL 110
[3] Parallel flow and counterflow operation possible
[4] Six soldered plates
[5] Recording of temperature using WL 110

Technical Data

6 plates, stainless steel
Heat transfer area: 0,048m²
Max. flow rate: 420L/h

Dimensions and Weight

LxWxH: 400x230x85mm
Weight: approx. 3kg

Scope of Delivery

1 plate heat exchanger
1 set of instructional material

Order Details

060.11002 WL 110.02 Plate Heat Exchanger